PROSEP FILTER SYSTEMS LTD

61 SERIES 5 STACK HOUSINGS FOR DOE CODE 'O' ELEMENTS

No.	Description	Material
1	LID	316L ST.STL.
2	1 HIGH GUIDE + CUP	316L ST.STL.
2	2 HIGH GUIDE + CUP	316L ST.STL.
2	3 HIGH GUIDE + CUP	316L ST.STL.
2	4 HIGH GUIDE + CUP	316L ST.STL.
3	GUIDE CUP	316L ST.STL.
4	CENTRE ROD TOP SECT	316L ST.STL.
5	SPRING + SEAL ASSEMBLY	316L ST.STL.
6	COMPRESSION PLATE	316L ST.STL.
7	COMP NUT + WASHER	316L/PTFE
8	COMP NUT WASHER	PTFE
9	TOP GASKET	E.P.
9	TOP GASKET	SILICONE
9	TOP GASKET	VITON
10	CLAMP	304 ST.STL.
11	CLAMP TEE BAR	316L ST.STL.
12	DRAIN CAPS	316L ST.STL.
13	VENT CAP	316L ST.STL.

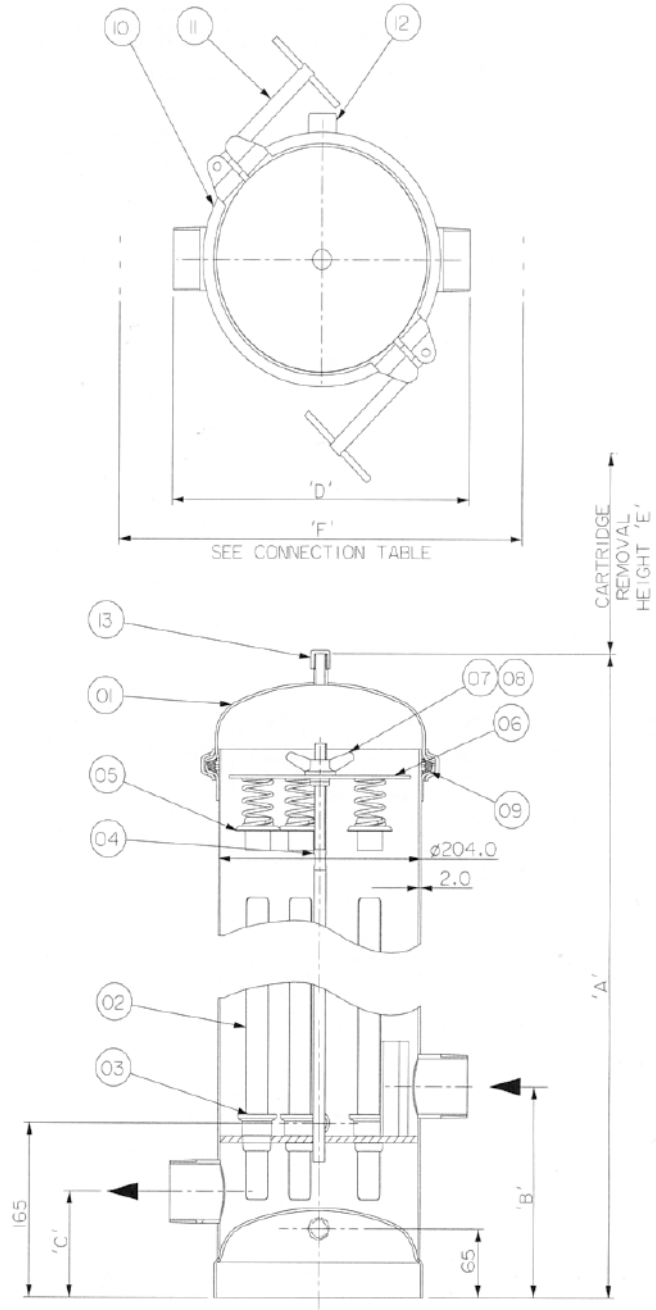

Connection Options	Dim 'F'
DN50 BS4504 PN16 SO	310
2" ANSI B16.5 150 lb SO	310
DN50 DIN 2633	390
2" TRI-CLAMP	305
NW50 DIN 11851 'M'	331
2" RJT 'M'	305
2" IDF 'M'	305

Model	No. of Cartridges	Max Operating Conditions Bar.g and °C	Materials of Construction	Connection Size and Type	Volume (litres)	Dry Weight (kg)	Dimension (mm)				
							A	B	C	D	E
61051OAN20AIEE	5 x 10"	10 and 110	316L ST.STL.	2" BSP 'M'	14.5	15	574	200	100	300	250
61052OAN20AIEE	5 x 20"	10 and 110	316L ST.STL.	2" BSP 'M'	22.5	18	824	200	100	300	500
61053OAN20AIEE	5 x 30"	10 and 110	316L ST.STL.	2" BSP 'M'	30.5	21	1079	200	100	300	750
61054OAN20AIEE	5 x 40"	10 and 110	316L ST.STL.	2" BSP 'M'	38.5	24	1334	200	100	300	1000

UNIT G19, RIVER BANK WAY, LOWFIELDS BUSINESS PARK,
ELLAND, WEST YORKSHIRE HX5 9DN
TEL: 01422 377367 FAX: 01422 377369
Email: sales@prosep.co.uk Web: www.prosep.co.uk